312311

24225

4 Hours / 70 Marks Seat No. | | | | | | | | |

Instructions –
(1) All Questions are *Compulsory.*
(2) Answer each next main Question on a new page.
(3) Illustrate your answers with neat sketches wherever necessary.
(4) Figures to the right indicate full marks.
(5) Assume suitable data, if necessary.
(6) Use of Non-programmable Electronic Pocket Calculator is permissible.
(7) Mobile Phone, Pager and any other Electronic Communication devices are not permissible in Examination Hall.

Marks

1. Attempt any TWO of the following : **8**

a) A-Line AB has its endpoint A 16 mm above H.P. and 25 mm in front of the V.P. The length of a line in the T.V. is 60 mm and the length of the F.V. line is 65 mm. The distance between the projectors at endpoints A and B is 45 mm. Draw a line projection and find the inclination with H.P and V.P.

b) A square ABCD of 50mm side rests on corner A on the H.P. in such a way that the plane appears as a rhombus in the plan with a diagonal containing corner A measuring 30 mm. Draw three views of the square when diagonal BD is perpendicular to V.P. Find the inclination of the plane with H.P.

Marks

c) A line AB, 70 mm long is inclined at an angle of 45° to the H.P. and 30° to the V.P. Its endpoint A is on the H.P. and 25 mm in front of the V.P. Draw the projection of the line AB.

2. Attempt any TWO of the following : 12

a) A pentagonal plane of side 30 mm is kept on the H.P. on one of its sides with the corner opposite to the side 25 mm above H.P. and perpendicular to V.P. Draw three views of the pentagonal plane and find its inclination with H.P.

b) Figure no 1 shows an isometric view of a machine component. Draw the following views.

i) Sectional Front View (Section A-A)

ii) Top View.

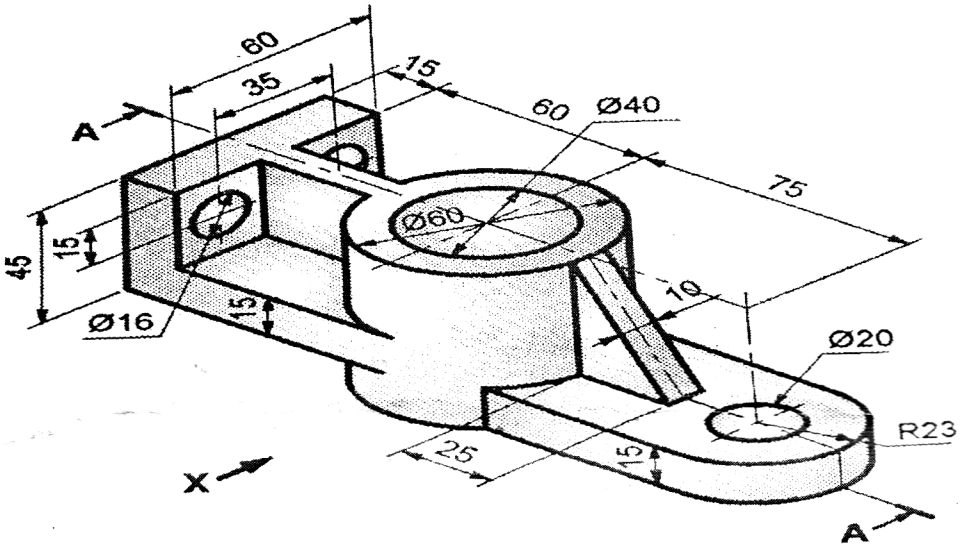

Fig. No. 1

Marks

c) Figure No. 2 shows an isometric view of the machine component. Draw the following view looking in the direction of X.

i) Sectional Front View (Section A-A)

ii) Top View.

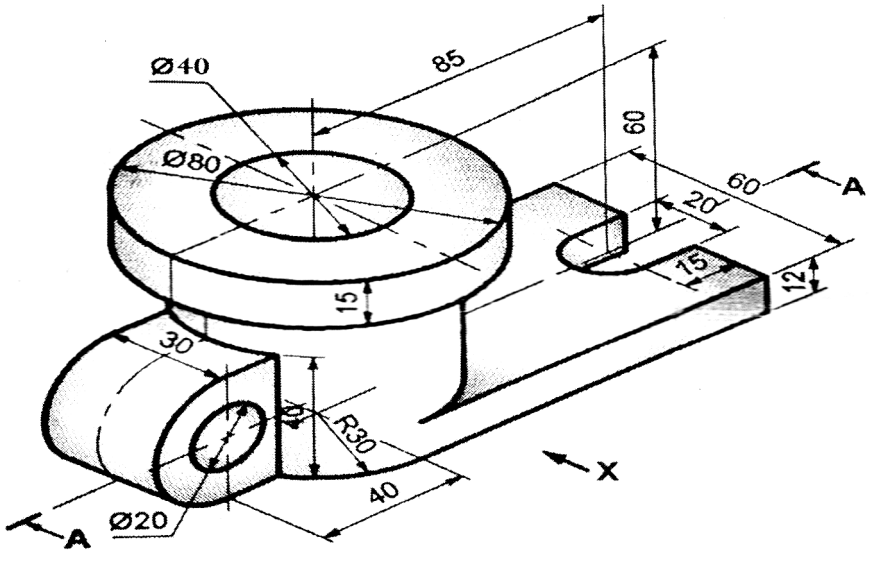

Fig. No. 2

3. Attempt any THREE of the following : 18

a) A cone of base diameter 40 mm and axis length 60 mm is kept on the H.P. on a point of its base circle such that its axis is inclined to H.P. at 30° and parallel to V.P. Draw projection of cone.

b) A square pyramid side of base 40 mm axis length 60 mm is kept on the H.P. on a corner of its base such that its axis makes an angle of 30° to the H.P. and parallel to the V.P. Draw the projection of the pyramid.

c) A vertical cylinder of 75 mm diameter and 100 mm length of the axis is resting on its base on the H.P. It is penetrated by a horizontal square prism of 40 mm side of base and 95 mm axis length, the axis of which is parallel to V.P. and bisect the axis of cylinder while its faces are equally inclined with H.P. Draw the projection of both the solids showing curves of intersection.

Marks

d) A square prism side of base 40 mm, height 75 mm is kept on the H.P. on its base with its rectangular faces equally inclined to V.P. It is penetrated by a horizontal square prism of the side of base 30 mm, axis length 75 mm such that the axis of the two prisms bisects each other at right angle. The rectangular faces of the horizontal square prism are equally inclined to H.P. and the axis is parallel to both H.P. and V.P. Draw the projection of solids showing the line of intersection.

4. Attempt any TWO of the following : 16

a) Figure No. 3 shows a pictorial view of the machine component, Draw the following views.

i) Sectional Front View (Section A-A) in the direction of X

ii) Top View

iii) Side view in the direction of Y.

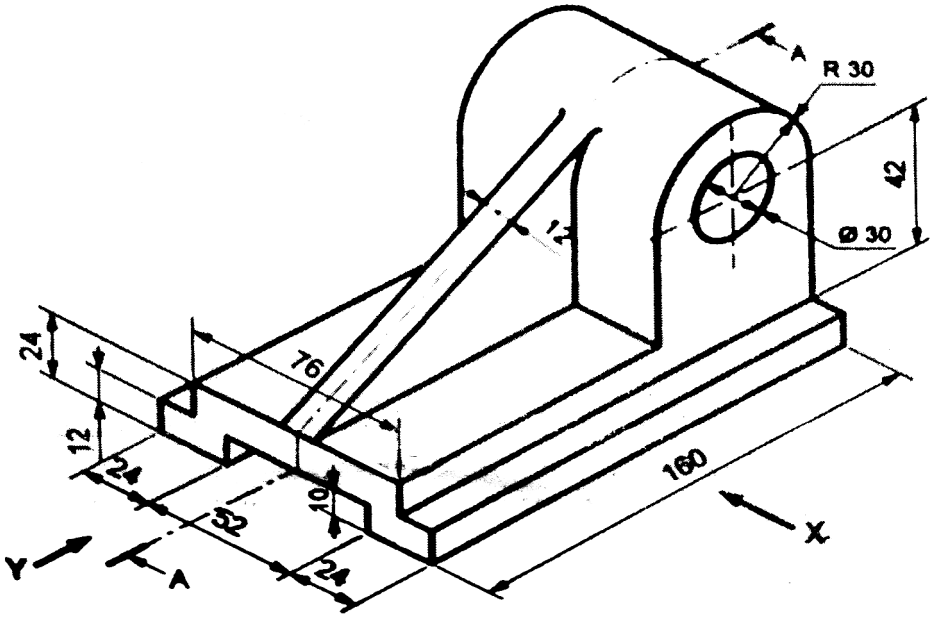

Fig. No. 3

b) A pentagonal prism having side of base 30 mm and axis 70 mm long is resting in the H.P. on one of its base edges. Draw the projections of the prism if the vertical face containing that edge makes an angle of 60° with the H.P. and its axis is parallel to V.P.

Marks

c) A square pyramid 50 mm edge of base and 60 mm axis length is resting on its base in the H.P. with edge of base equally inclined to V.P., A square hole with side 25 mm is cut through the square pyramid such that its axis intersects the axis of the pyramid 22 mm above the base. The axis of hole is perpendicular to V.P. All the faces of square hole are equally inclined with H.P. Draw the DLS of pyramid.

5. Attempt any TWO of the following : 16

a) A vertical cylinder of base diameter 55 mm axis length 90 mm is horizontally penetrated by another cylinder of base 45 mm and axis length 90 mm such that its axis is parallel to V.P. and bisect the axis of vertical cylinder. Draw the projection of solids showing curves of intersection.

b) A right circular cone having diameter of base 40 mm axis length 60 mm resting on its base on H.P. is cut by an AIP inclined at 45° to H.P. and bisecting the axis. Draw development of lateral surface of cone.

c) Figure no 4 shows the elevation of a square prism with side of base 30 mm axis length 60 mm kept on its base on H.P. with all sides equally inclined to V.P. and is cut by two cutting planes. Draw development of surface.

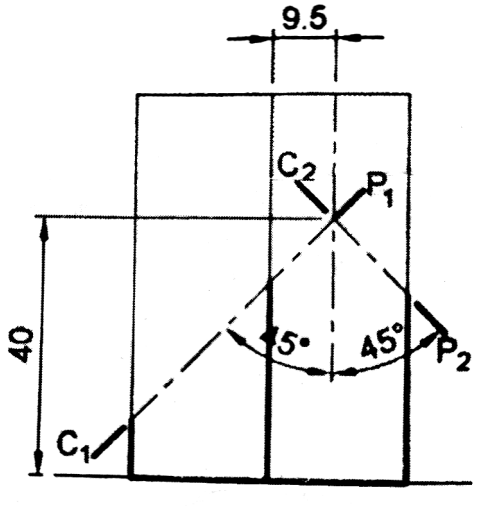

Fig. No. 4